REVISION RECORD				
REV	ECN	DESCRIPTION	DRFT	DATE

(W/O COVER)

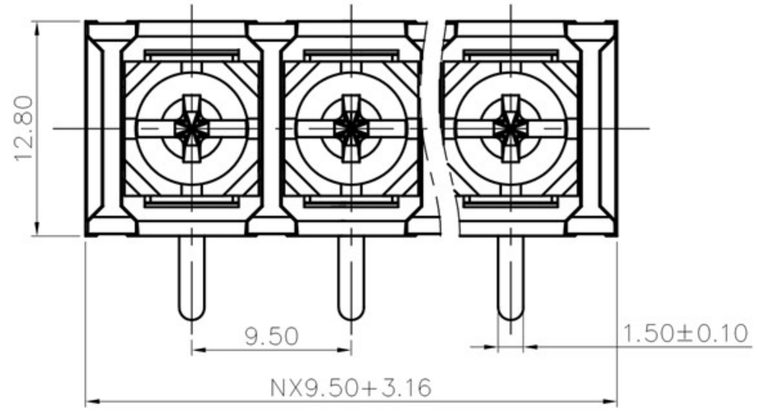

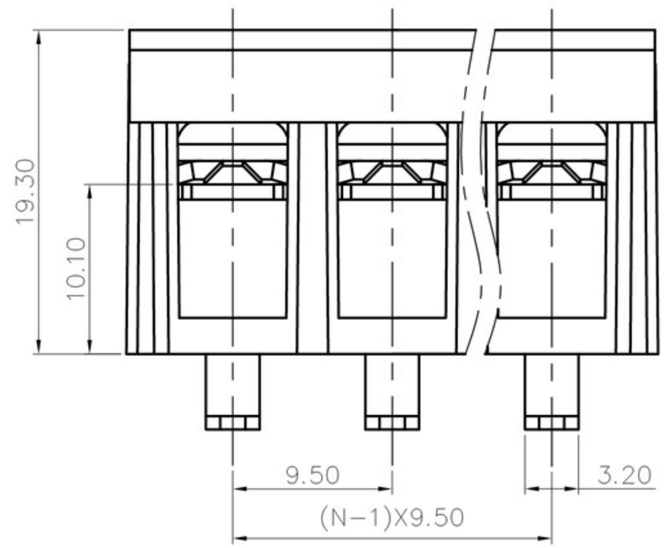

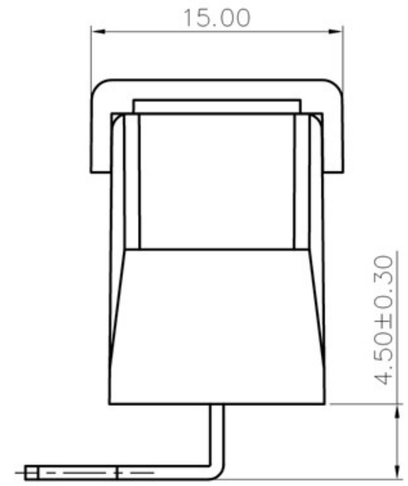

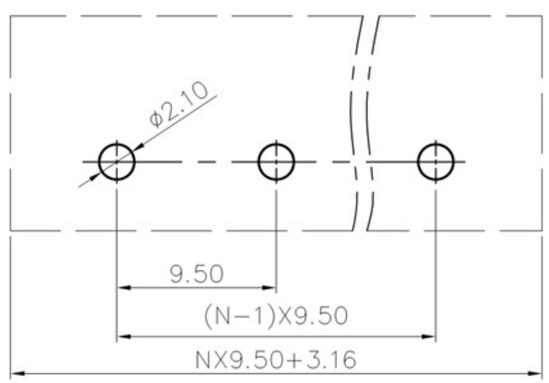

PCB LAYOUT

NOTES1:
UL Standard
1.Rated voltage/current : 300V / 20A
2.Torque value : M4 , 10.53Lb.in
3.Wire range : 22~12AWG

NOTES2:
1.Dimension shall be interpreted per ASME Y14.5−2009
2.Pitch : 9.50mm, Poles : N=02~22P
3.Withstanding voltage : AC1600V/1Min
4.Operating temperature: −40°C~+105°C
5.Undimensioned tolerances:

Pitch range in mm			Nominal dimension range in mm					− ⌒ ⏢
TO 6	Over 6 TO 10	Over 10 TO 24	TO 30	Over 30 TO 60	Over 60 TO 100	Over 100 TO 150	Over 150	0.1/10
								∠
±0.15	±0.20	±0.30	±0.30	±0.50	±0.70	±1.00	±1.30	±2°

6.RoHS Compliance

DETACHED LISTS			
PART NO.: /	慈溪市美感电子接插件厂 Cixi Meigan Electric Appliance Socket Factory		
APPD: /	NAME: MG48R-9.5		
CHKD: /			
DRFT: /	TITLE: CUSTOMER DRAWING	REV	D0
THIRD ANGLE PROJECTION	DRAWING NO.: /	SHEET	1/1
	MM (INCH) DO NOT SCALE DRAWING	SCALE	1:1